Table Runners

24”x66”

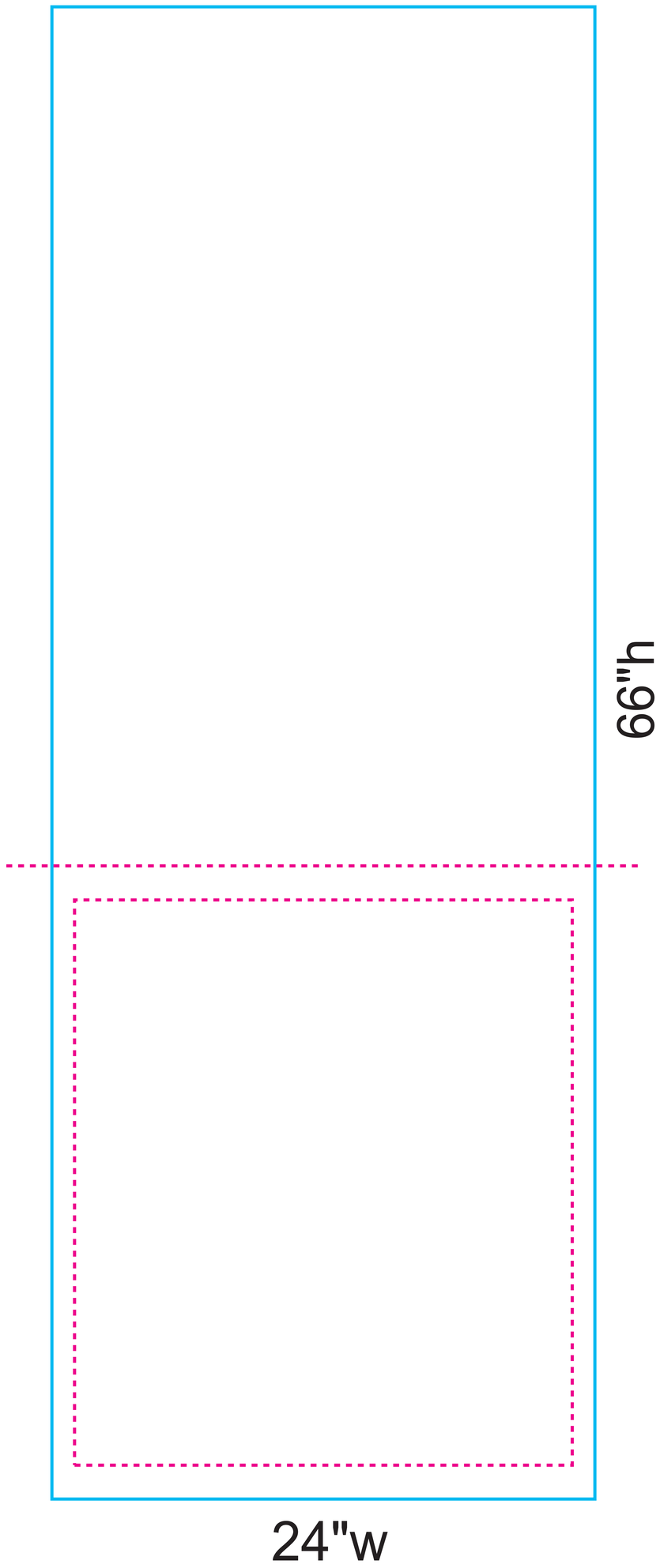

Finished size: 24”w x 66”h
Live area: 22”w x 25”h
(Centered in bottom 28”)

30”x66”

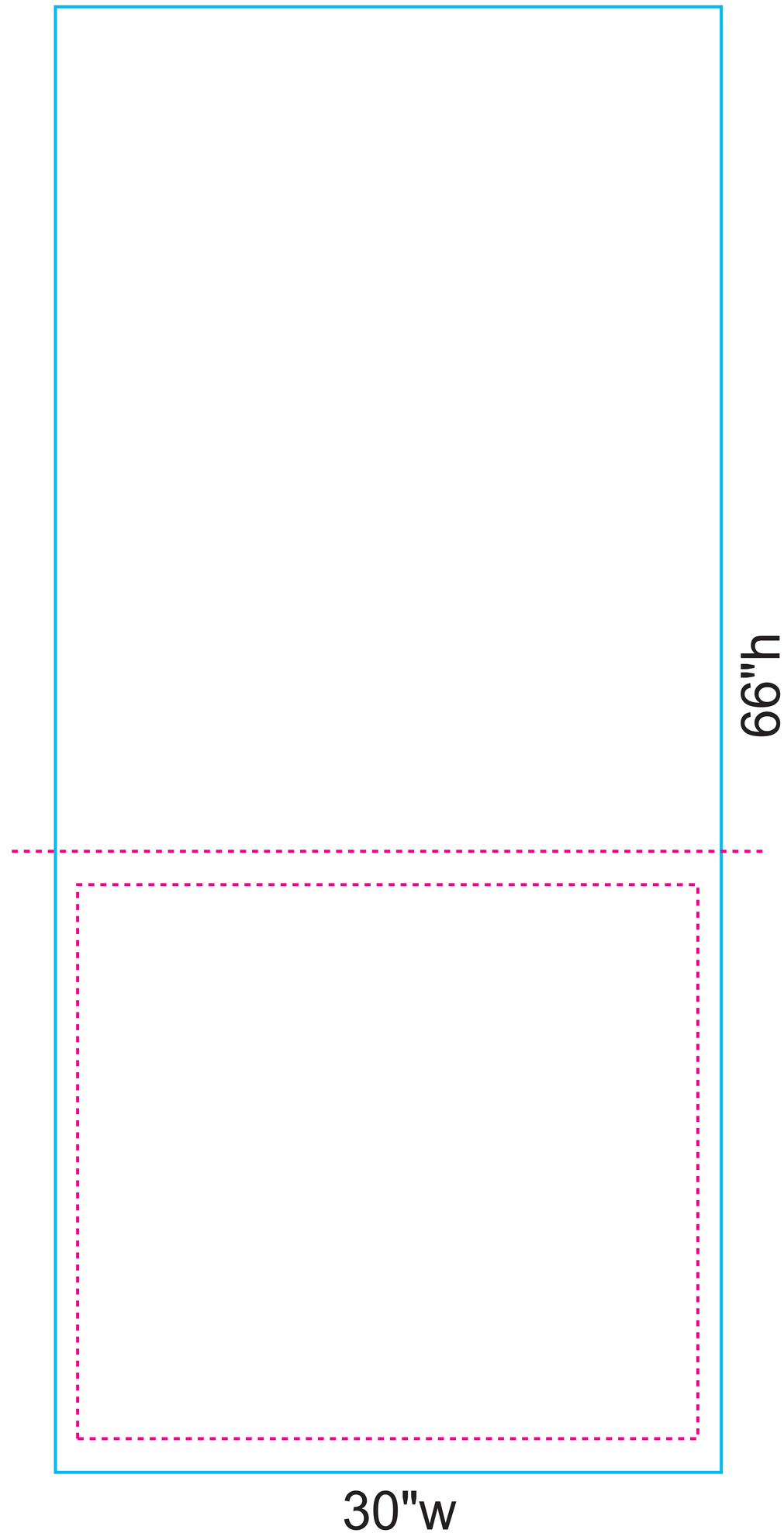

Finished size: 30”w x 66”h
Live area: 28”w x 25”h
(Centered in bottom 28”)