6’ Full Table Throw

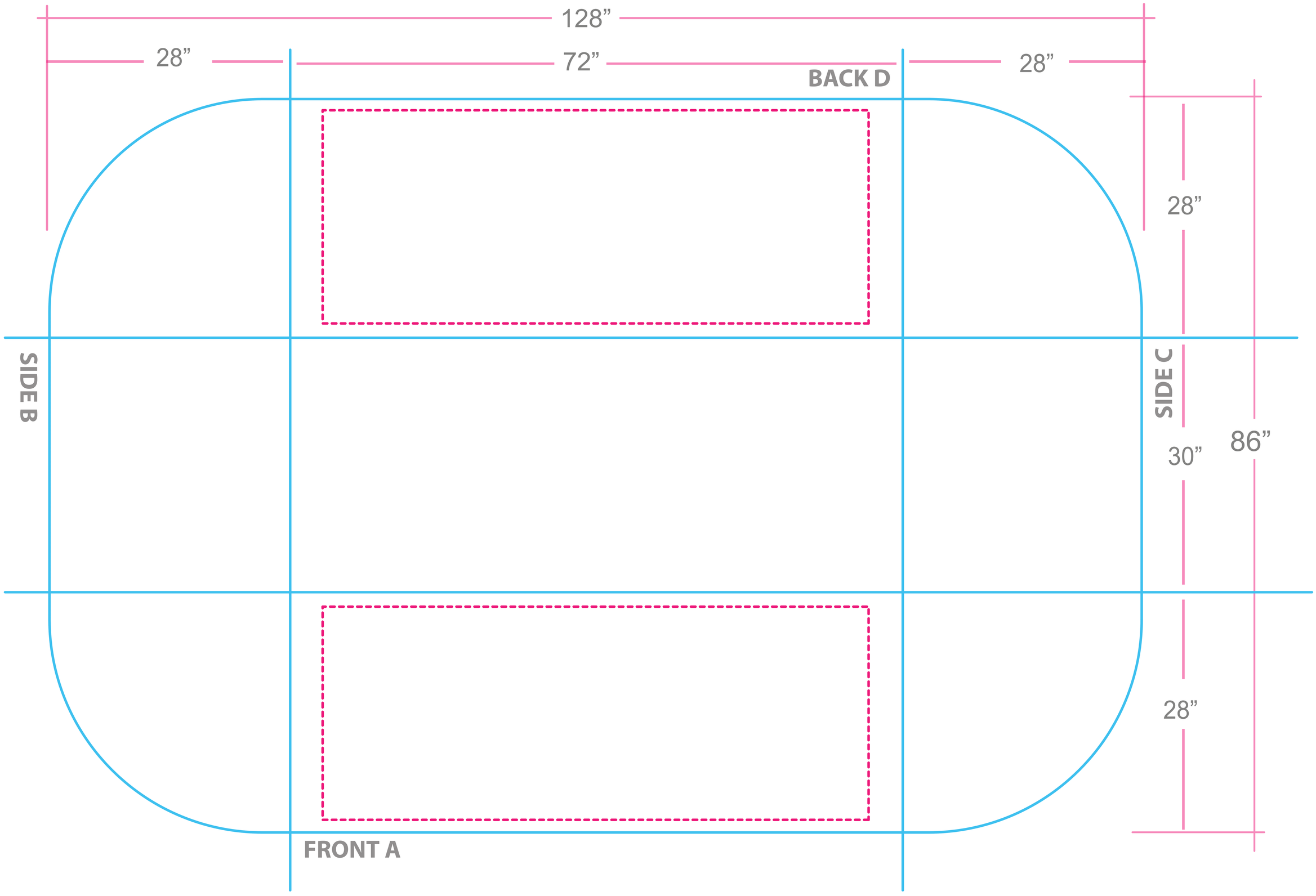

FINAL SIZE: 128 x 86

LIVE AREA: 64 x 25

8’ Full Table Throw

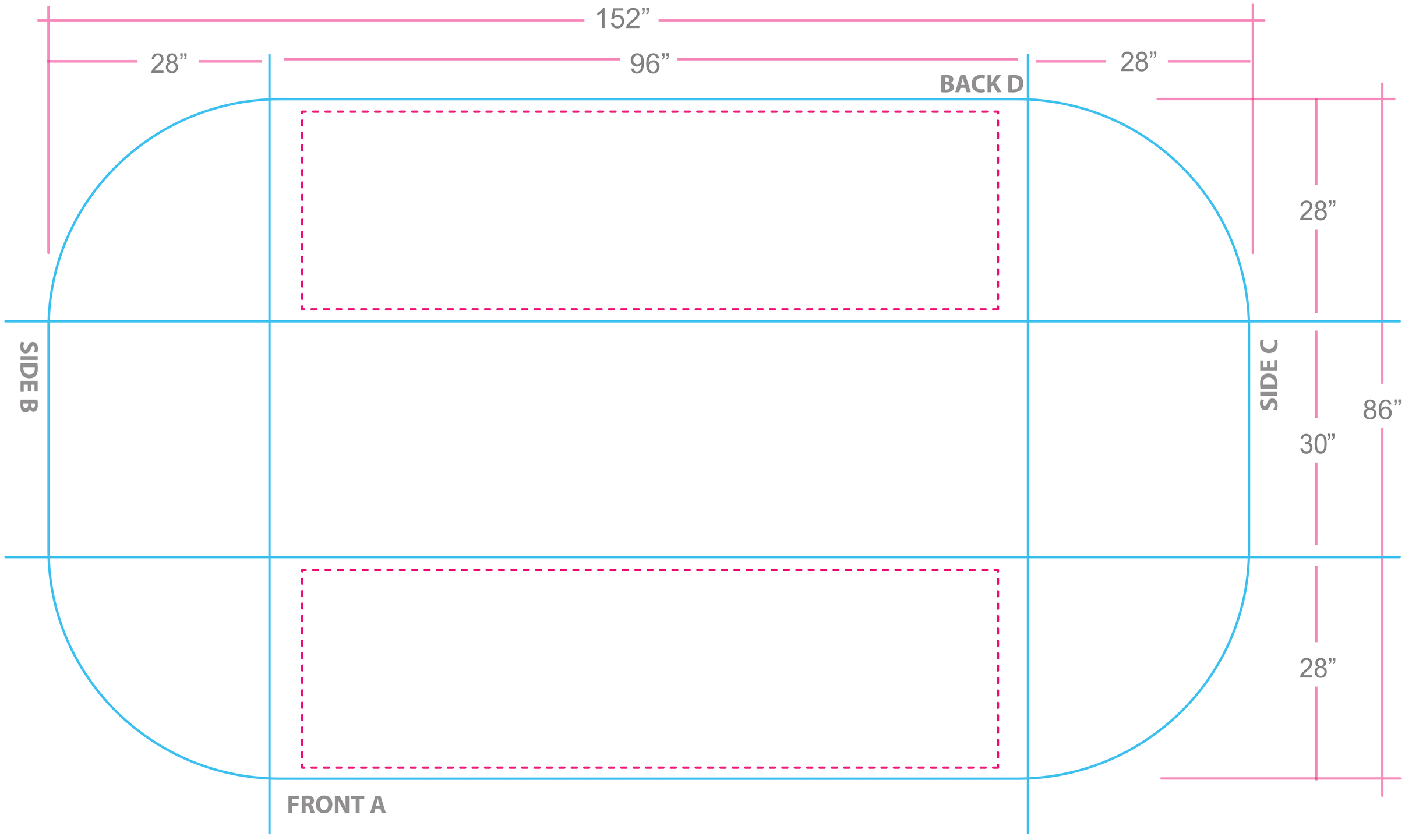

FINAL SIZE: 152 x 86

LIVE AREA: 88 X 25